Published: 11-May-2011

Wheels and Tires -

Wheel Type

• CAUTIONS:

CAUTION: With reduced size spare wheel fitted, do not exceed 50 mph (80 km/h) and replace with standard size wheel at earliest opportunity.

CAUTION: Do not use power tools when operating the spare wheel winch, raise and lower winch manually using hand tools only.

Item	Specification
Alloy	6.5J x 16
Alloy	7.5J x 17
Alloy	8.0J x 18
Steel	7.0 J X 17
Alloy wheel (Accessory)	8.5J x 19
Steel wheel (Spacesaver)	4.0J x 17

Tire Sizes - Standard Fit

CAUTION: CAUTION: Inner tubes must not be fitted with any of these tires.

Wheel Size	Tire Size	Load index & Speed Rating
6.5J x 16	215/75 R16	103H or 107H
7.5J x 17	235/65 R17	104V or 108V
7.0J X 17	235/65 R17	103H
8.0J x 18	235/60 R18	103V OR 107V
4.0J x 17	135/90 R17	

Tire Sizes - Accessory Fit

CAUTION: CAUTION: Inner tubes must not be fitted with any of these tires.

Wheel Size	Tire size	Speed Rating
8.0J x 19	235/55 R19	105V

Tire Pressures

Loading condition	bar	lb/in²
All conditions - Vehicle loaded to maximum vehicle gross weight:		
Front	2.2	32
Rear	2.2	32
Spacesaver spare wheel	2.2	32
Standard size spare wheel	2.2	32
19" Accessory wheel	2.4	35

Recommended Lubricant

Item	Land Rover Part No.
Wheel hub spigot	RYL 105020

Torque Specifications

Description	Nm	lb-ft
Road wheel nuts*	133	98
Tire low pressure sensor	8	6

*** Road wheel nuts must be tightened by diagonal selection**

mcx30.com

Published: 11-May-2011

Wheels and Tires - Wheels and Tires

Description and Operation

OVERVIEW

A number of alloy and steel wheel and tire size combinations are available. A Tire Pressure Monitoring System (TPMS) is also available. The system monitors the pressure in each tire and informs the driver if the pressure falls below predetermined thresholds.

WHEELS

Item	Part Number	Description
A	-	6.5J X 16
B	-	7.5J X 17 - Style 1
C	-	7.5J X 17 - Style 2
D	-	8.0J X 18
E	-	8JX 19 (From 2009MY)
F	-	7J X 17 - Steel

The spare wheel fitted is a full size 7J X 17 steel wheel and uses a 225/65 R17 tire.

On vehicles from 2009MY a 8J X 19 alloy wheel is available and uses a 235/55 R19 tire. A 10 spoke chrome shadow 8J X 19 alloy wheel fitted with a 235/55R19 tire is also available as an optional fitment.

TIRES

Tires are available in a number of sizes and tread patterns dependent on vehicle usage. Tire sizes are as follows:

- 215/75R16
- 225/65 R17
- 235/65R17
- 235/60R18
- 235/55R19.

WARNING: Tires should be inflated to the recommended pressures (as given in the Owners Handbook) only when the tires are cold (ambient temperature). If the tires have been subjected to use or exposed to direct sunlight, move the vehicle into a shaded position and allow the tires to cool before checking/adjusting the pressures.

Tire Changing

On vehicles fitted the TPMS, care must be taken when removing and refitting tires to ensure that the tire pressure sensor is not damaged.

Vehicles fitted with TPMS can be visually identified by an external metal locknut and valve of the tire pressure sensor on the road wheels. Vehicles without TPMS will have rubber tire valve.

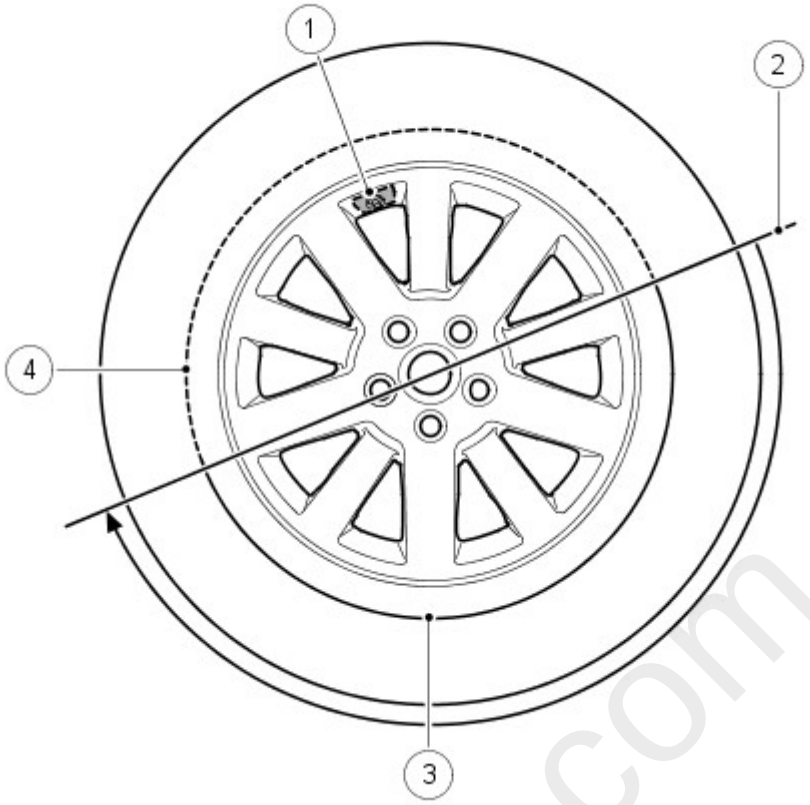

Item	Part Number	Description
1	-	Tire valve and pressure sensor
2	-	Tire fitting/removal tool initial start position
3	-	High tire and bead tension area
4	-	Low tire and bead tension area

When removing the tire, the bead breaker must not be used within 90 degrees of the tire valve in each direction on each side of the tire.

When using the tire removal machine, the fitting arm start position must be positioned as shown in the tire changing illustration for each side of the tire. The wheel can then be rotated through 180 degrees in a counter-clockwise direction. This will relieve tension from the tire bead allowing the remaining 180 degrees of the tire to be manually pulled from the rim.

When refitting the tire, position the fitting arm as shown. Rotate the tire and take care that the bead on the low tension side of the tire does not damage the sensor.

TREAD Act - NAS Only

Vehicles supplied to the North American markets must comply with the legislation of the Transport Recall Enhancement, Accountability and Documentation (TREAD) act. Part of the requirement of the TREAD act is for the vehicle to display a label, positioned on the driver's side 'B' pillar, which defines the recommended tire inflation pressure, load limits and maximum load of passengers and luggage weight the vehicle can safely carry. This label will be specific to each individual vehicle and will be installed on the production line.

This label must not be removed from the vehicle. The label information will only define the specification of the vehicle as it came off the production line. It will not include dealer or owner fitted accessory wheels and tires of differing size from the original fitment.

If the label is damaged or removed for body repair, it must be replaced with a new label specific to that vehicle. A new label is requested from Land Rover parts and will be printed specifically for the supplied VIN of the vehicle.

TIRE PRESSURE MONITORING SYSTEM (TPMS)

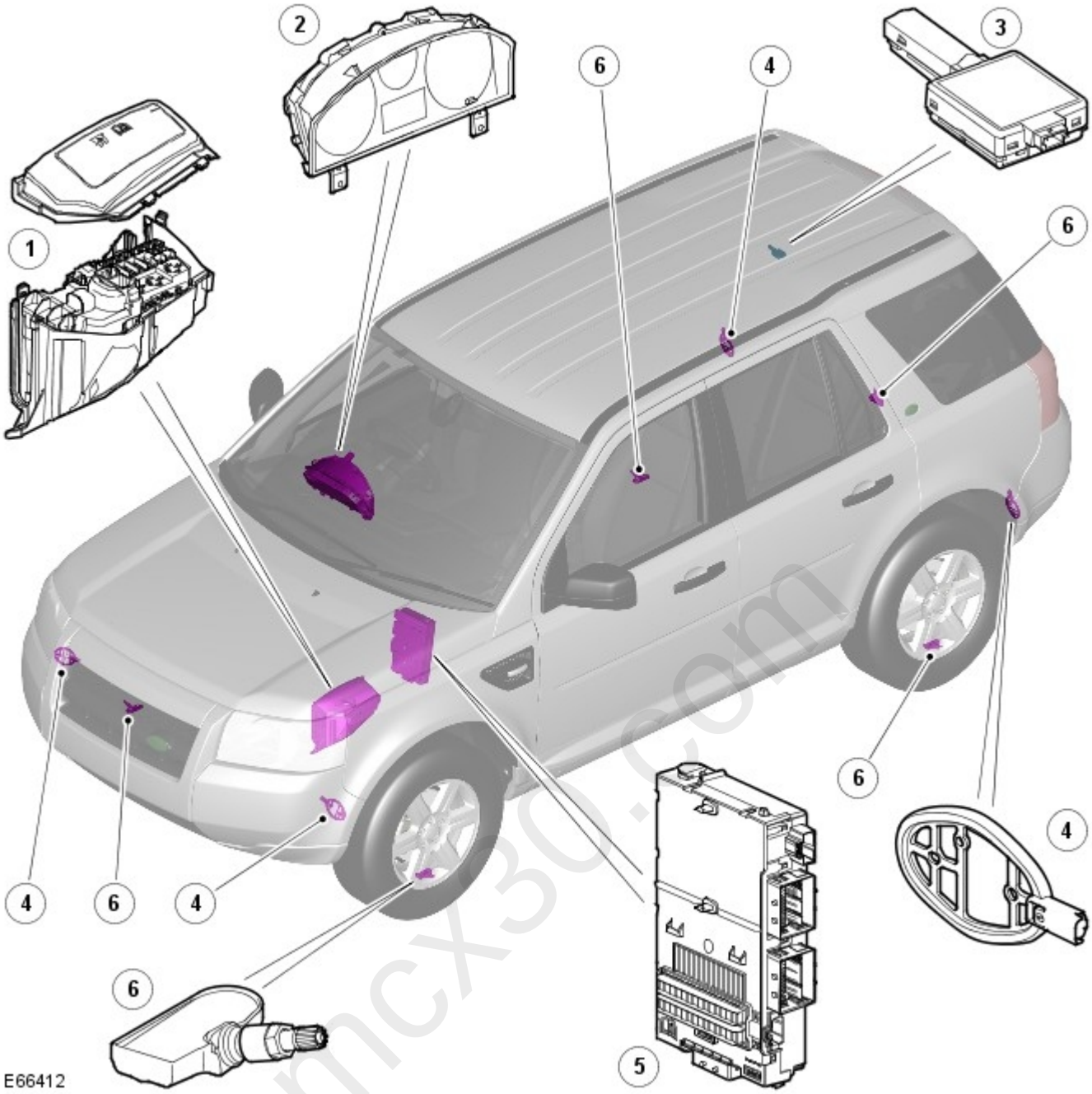

Item	Part Number	Description
1	-	Battery junction box
2	-	Instrument cluster
3	-	RF receiver
4	-	Initiator
5	-	Central Junction Box (CJB)
6	-	Tire pressure sensor

The TPMS is a driver assistance system which assists the driver to maintain the tire pressures at the optimum level. The TPMS is a standard fitment on North American Specification (NAS) vehicles and an optional fitment in other markets. The TPMS system has the following benefits:

- Improve fuel consumption
- Maintain ride and handling characteristics
- Reduce the risk of rapid tire deflation - which may be caused by under inflated tires
- Comply with legislation requirements in relevant markets.

CAUTION: The TPMS is not intended as a replacement for regular tire pressure and tire condition checks and should be considered as additional to good tire maintenance practices.

The TPMS measures the pressure in each of the tires on the vehicle (including the spare, if required) and issues warnings to the driver if any of the pressures deviate from defined tolerances.

• NOTE: During a 'blow-out' a very rapid reduction in pressure is experienced. The system is not intended to warn the driver of a 'blow-out', since it is not possible to give the driver sufficient warning that such an event is occurring, due to its short duration. The design of the TPMS is to assist the driver in keeping the tires at the correct pressure, which will tend to reduce the likelihood of a tire 'blow-out' occurring.

The controlling software for the TPMS is located within the CJB. The software detects the following:

- the tire pressure is below the recommended low pressure value - under inflated tire
- the position of the tire on the vehicle.

The system comprises a Radio Frequency (RF) receiver, 4 initiators and 4 tire pressure sensors (5 if the spare wheel has a sensor fitted).

The 4 initiators are hard wired to the CJB. The initiators transmit 125 KHz Low Frequency (LF) signals to the tire pressure sensors which respond by modifying the mode status within the RF transmission. The 315 or 433 MHZ RF signals are detected by the RF receiver which is located at the rear of the vehicle, behind the headlining. The RF receiver is connected to the CJB on the Local Interconnect Network (LIN) bus. The received RF signals from the tire pressure sensors are passed to the CJB on the LIN bus and contain identification, pressure, temperature and acceleration information for each wheel and tire.

The TPMS software communicates with the instrument cluster via the medium speed Controller Area Network (CAN) bus to provide the driver with appropriate warnings. The TPMS software also indicates status or failure of the TPMS or components.

Tire Location and Identification

The TPMS can identify the position of the wheels on the vehicle and assign a received tire pressure sensor identification to a specific position on the vehicle, for example FL (front left), FR (front right), RL (rear left) and RR (rear right). This feature is required because of the different pressure targets and threshold between the front and rear tires.

The wheel location is performed automatically by the TPMS software using an 'auto-location' function. This function is fully automatic and requires no input from the driver. The TPMS software automatically re-learns the position of the wheels on the vehicle if the tire pressure sensors are replaced or the wheel positions on the vehicle are changed.

The TPMS software can automatically detect, under all operating conditions, the following:

- one or more new tire pressure sensors have been fitted
- one or more tire pressure sensors have stopped transmitting
- TPMS software can reject identifications from tire pressure sensors which do not belong to the vehicle
- the spare wheel and one of the 'running' wheels on the vehicle have changed positions.

If a new tire pressure sensor is fitted on any 'running' wheel, the software can learn the new sensor identification automatically when the vehicle is driven for more than 15 minutes at a speed of more than 20 km/h (12.5 mph).

• NOTE: The spare wheel is not fitted with a tire pressure sensor.

TPMS Operation

Each time the vehicle is driven the TPMS software activates each initiator in turn to transmit a LF 125 KHz signal to each tire pressure sensor. The LF signal is received by the tire pressure sensor which responds by transmitting a 315 or 433 MHZ (depending on market) signal which is received by the RF receiver. The signal contains coded data which corresponds to sensor identification, air pressure, air temperature and acceleration data. This is then passed to the CJB on the ISO 9141 K Line.

If the vehicle has been parked for more than 15 minutes and then driven at a speed of more than 12.5 mph (20 km/h), the initiators each fire an LF signal in turn for 18 seconds in the following order:

- Front LH
- Front RH
- Rear RH
- Rear LH.

Each tire pressure sensor responds in turn which allows the TPMS software to establish the sensor positions at the start of the drive cycle. This process is repeated up to three times but less if the sensor positions are already known. The process is known as 'Auto Location' and takes 2 to 4 minutes to complete.

During this period the tire pressure sensors transmit at regular intervals, once every 5 seconds (once every 15 seconds on NAS vehicles). For the remainder of the drive cycle the tire pressure sensors transmit once every 60 seconds or more often if a change of tire pressure is sensed until the vehicle stops and the TPMS returns to the parking mode.

Once the wheel positions have been established, the initiators stop transmitting the LF signal and do not transmit again until the vehicle has been parked for more than 15 minutes.

The warning appears in the instrument cluster message centre when the inflation pressure has fallen to 25% of the nominal pressure. The displayed message will also include the position(s) of the affected wheel(s).

The TPMS enters 'Parking Mode' after the vehicle speed has been less than 20 km/h (12.5 mph) for 15 minutes. In parking mode the tire pressure sensors transmit a coded RF signal once every 13 hours. If the tire pressure decreases by more than 0.06 bar (1 lbf/in^2), the sensor will transmit more often if pressure in the tire is being lost.

The spare wheel tire pressure sensor also transmits a signal once every 13 hours in the same manner as the 'running wheels' when in parking mode. If the tire pressure decreases by more than 0.06 bar (1 lbf/in^2), the sensor will transmit more often if pressure in the tire is being lost.

Initiators

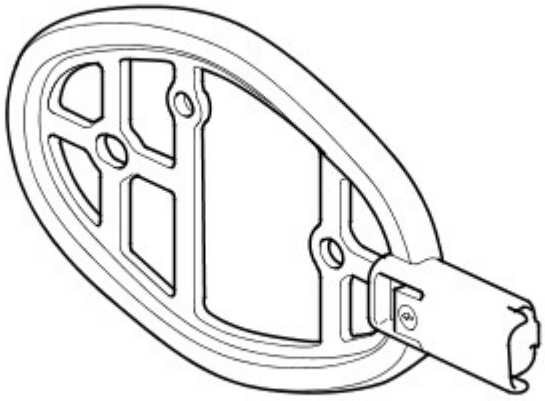

E45552

Four initiators are fitted to the vehicle. The front initiators are located near the front of the front wheel arches, behind the fender splash shields. The rear initiators are located at the rear of the rear wheel arches, behind the fender splash shields. Each initiator has a connector which connects to the vehicle body harness.

The initiator is a passive, LF transmitter. The initiators transmit their signals which are received by the tire pressure sensors, prompting them to modify their mode status.

The TPMS energises each initiator in turn using LF drivers. The corresponding tire pressure sensor detects the LF signal and responds by modifying the mode status within the RF transmission.

Tire Pressure Sensor

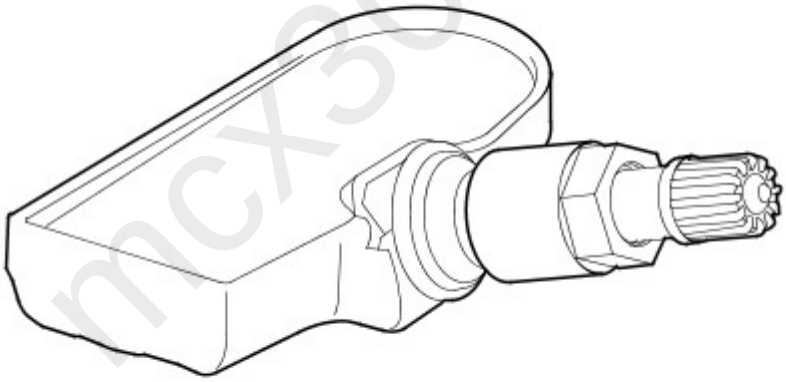

E45553

The TPMS uses active tire pressure sensors which are located on each wheel, inside the tire cavity. The sensor incorporates the tire valve and is secured in the wheel by a nut on the outside of the wheel. The sensor contains a Printed Circuit Board (PCB) which houses a Positive Temperature Co-efficient (PTC) sensor, a Piezo pressure sensor. a radio receiver and transmitter and a lithium battery.

The tire pressure sensors use the PTC sensor and the Piezo sensor to periodically measure the pressure and temperature of the air inside the tire. The data is transmitted by RF data signals at either 315 MHz or 433 MHz dependant on market requirements.

The RF transmission from the sensor contains a unique identification code in its transmission data. This allows the TPMS to identify the wheel on the vehicle. If the sensor is replaced on a 'running' wheel, the new sensor identification will be learnt when the vehicle is driven at speed of more than 20 km/h (12.5 mph) for 15 minutes.

If a new sensor is fitted to the spare wheel, the identification for that sensor can be programmed into the TPMS using IDS. The code is provided on a label with the complete tire, wheel and sensor assembly when new and is also printed on the casing of each sensor. Alternatively, the spare wheel may also be programmed to the TPMS by using it as a 'running' wheel for 15 minutes at a speed of more than 20 km/h (12.5 mph), then replacing it to the spare wheel location.

The tire pressure sensor can also detect when the wheel is rotating. In order to preserve battery power, the sensor uses different transmission rates when the wheel is stationary or moving. The wheel speed required to change from stationary to moving transmission rates is very low to allow for the requirement for slow off-road driving.

mcx30.com

The care points detailed in 'Tire Changing' earlier in this section must be followed to avoid damage to the sensor. If a new sensor is fitted, a new nut, seal and washer must also be fitted and the sensor nut tightened to the correct torque as given in the Service Repair Manual.

Instrument Cluster Indications

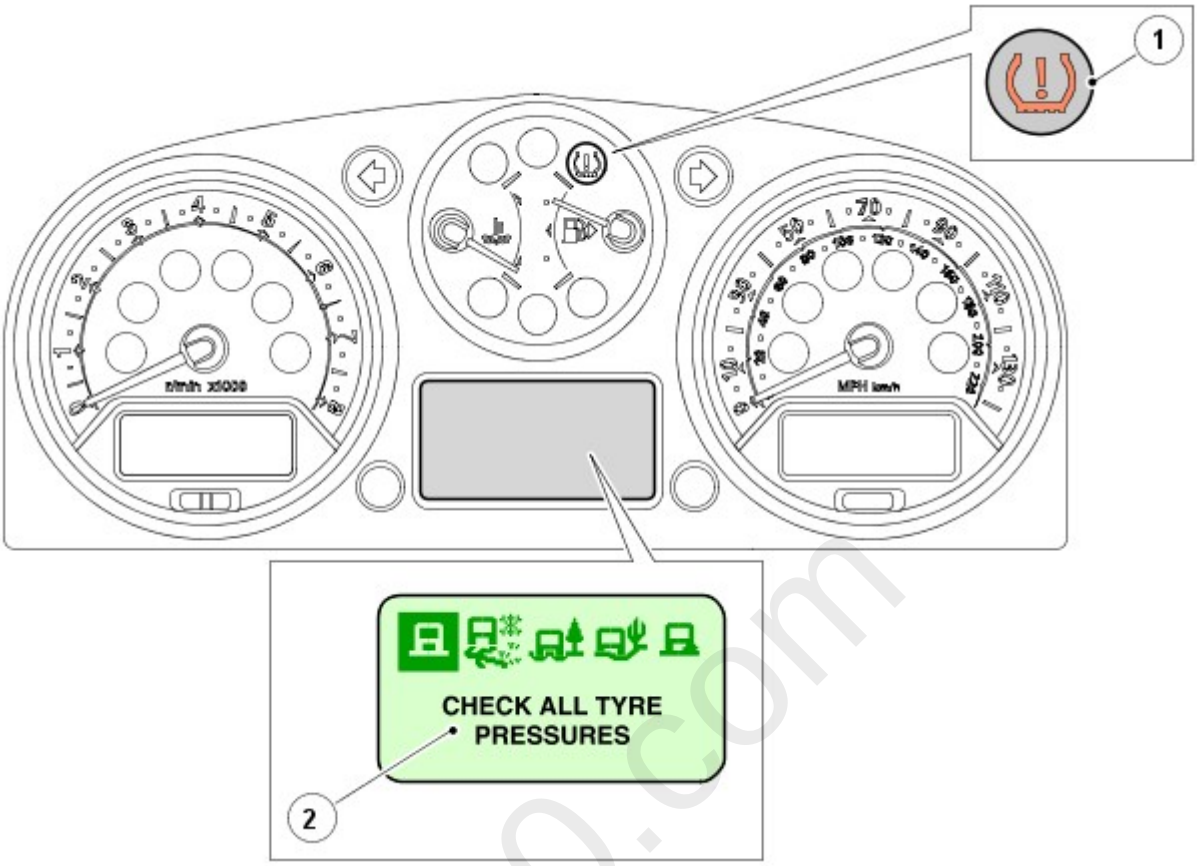

Item	Part Number	Description
1	-	Low tire pressure warning indicator
2	-	Message centre

The warning indications to the driver are common on all vehicles fitted with TPMS. The driver is alerted to system warnings by a low tire pressure warning indicator in the instrument cluster and an applicable text message in the message centre.

The TPMS software within the CJB passes system status information to the instrument cluster on the medium speed CAN bus. The instrument cluster then converts this data into illumination of the warning indicator and display of an appropriate message.

When the ignition is switched on, the warning indicator is illuminated for 3 seconds for a bulb check.

• NOTE: If the vehicle is not fitted with the TPMS, the warning indicator will not illuminate.

The instrument cluster checks, within the 3 second bulb check period, for a CAN bus message from the TPMS. During this time the TPMS performs internal tests and CAN bus initialisation. The warning indicator will be extinguished if the TPMS software does not issue a fault message or tire pressure warning message.

If a TPMS fault warning message is detected by the instrument cluster at ignition on, the warning indicator will flash for 75 seconds after the 3 second bulb check period and then remain permanently illuminated.

If a tire pressure warning message is detected by the instrument cluster at ignition on, the warning indicator will extinguish briefly after the 3 second bulb check period, before re-illuminating to indicate a tire pressure warning.

The following table shows the warning indicator functionality for given events:

Event	Instrument Cluster Indications
Low pressure warning limit reached in high speed mode	Warning indicator illuminated. 'TYRE PRESSURES LOW FOR SPEED' message displayed.
Low pressure warning limit reached in one wheel in low speed mode	Warning indicator illuminated. 'CHECK ALL TYRE PRESSURES XX LOW' message displayed.
Low pressure warning limit reached in more than one wheel in low speed mode	Warning indicator illuminated. 'CHECK ALL TYRE PRESSURES' message displayed.
Warning limit reached in any 'running' wheel and no location specified by TPMS	Warning indicator illuminated. 'CHECK ALL TYRE PRESSURES' message displayed.
Warning limit reached in spare wheel (if fitted)	Warning indicator illuminated for 20 seconds and again at subsequent ignition cycles. 'CHECK SPARE TYRE PRESSURE' message displayed.
TPMS fault	Warning indicator flashing for 75 seconds and then remains permanently illuminated. 'TYRE PRESSURE MONITORING SYSTEM FAULT' message displayed.

Event	Instrument Cluster Indications
No transmission from a specific tire pressure sensor or Specific tyre pressure sensor fault	Warning indicator flashing for 75 seconds and then remains permanently illuminated. 'XX TYRE PRESSURE NOT MONITORED' message displayed for 20 seconds.
No transmission from more than one tyre pressure sensor or More than one tyre pressure sensor fault	Amber warning indicator flashing for 75 seconds and then remains permanently illuminated. 'TYRE PRESSURE MONITORING SYSTEM FAULT' message displayed for 20 seconds.
CAN signals missing	Warning indicator flashing for 75 seconds and then remains permanently illuminated. 'TYRE PRESSURE MONITORING SYSTEM FAULT' message is displayed for 20 seconds.

• NOTE: 'XX' is the tire position on the vehicle, for example Front Left, Front Right, Rear Left or Rear Right.

CONTROL DIAGRAM

• NOTE: **A** = Hardwired; **F** = RF transmission; **J** = ISO 9141 K Line; **N** = CAN bus Medium speed; **W** = LF transmission

mcx30.com

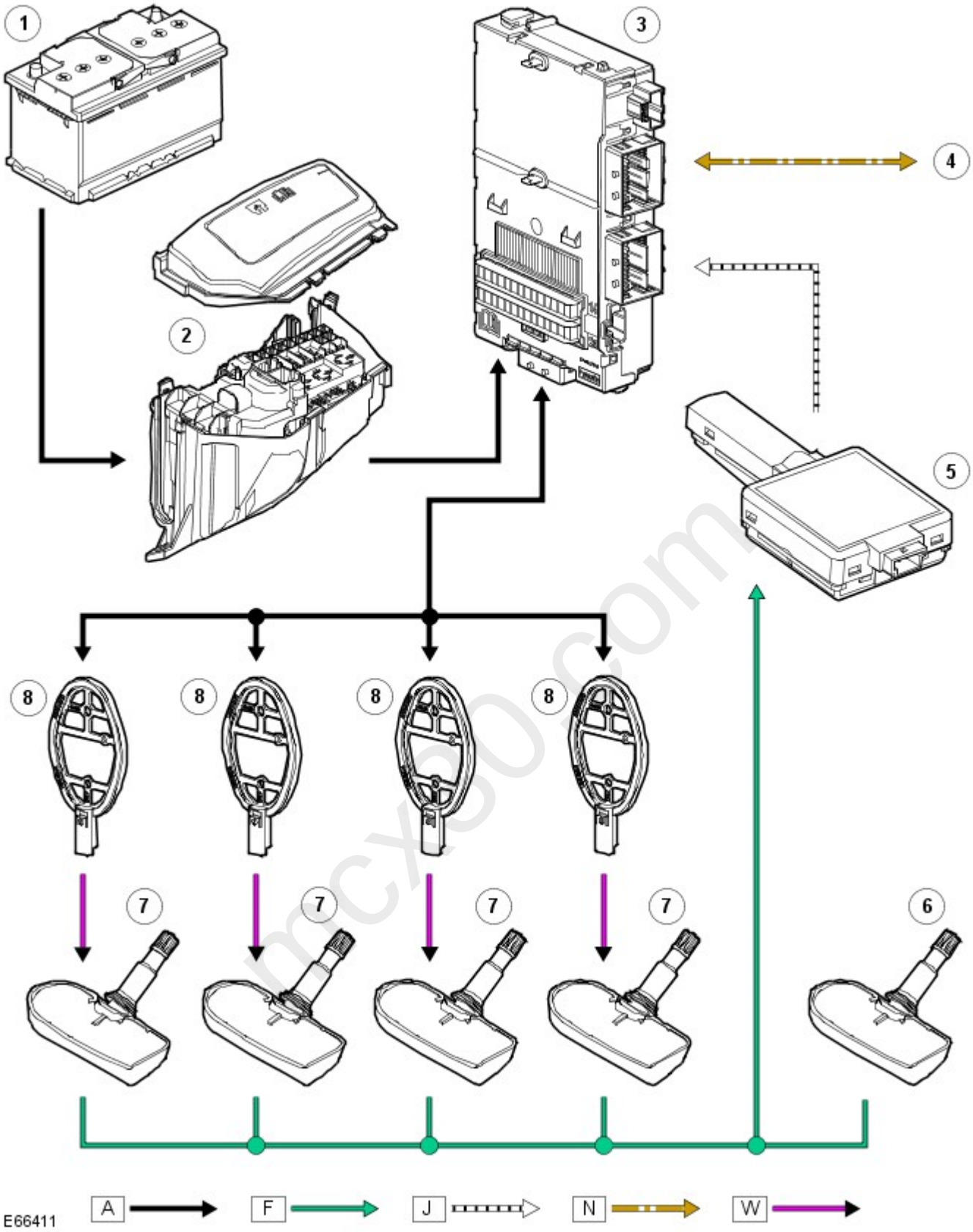

Item	Part Number	Description
1	-	Battery
2	-	Battery Junction Box (BJB)
3	-	CJB
4	-	Medium speed CAN Bus to other vehicle systems
5	-	RF remote receiver
6	-	Spare wheel tire pressure sensor
7	-	Tire pressure sensor (4 off)
8	-	Initiator (4 off)

Published: 11-May-2011

Wheels and Tires - Wheels and Tires

Diagnosis and Testing

Principles of Operation

For a detailed description of the wheels and tires and Tire Pressure Monitoring System (TPMS), refer to the relevant Description and Operation section in the workshop manual.
REFER to: Wheels and Tires (204-04 Wheels and Tires, Description and Operation).

Inspection and Verification

CAUTION: Diagnosis by substitution from a donor vehicle is **NOT** acceptable. Substitution of control modules does not guarantee confirmation of a fault, and may also cause additional faults in the vehicle being tested and/or the donor vehicle.

1. **1.** Verify the customer concern.
2. **2.** Visually inspect for, obvious signs of damage and system integrity.

Visual Inspection

Mechanical	Electrical
• Tire pressures • Tire/Wheel damage • Tire low pressure sensor installation/damage • Front initiator installation/damage • Rear initiator installation/damage	• Fuses • Central Junction Box (CJB) • Electrical connectors/harnesses • RF receiver (TPMS receiver)

3. **3.** If an obvious cause for an observed or reported concern is found, correct the cause (if possible) before proceeding to the next step
4. **4.** If the cause is not visually evident, check for Diagnostic Trouble Codes (DTCs) and refer to the DTC Index.

DTC Index

• NOTE: If the control module or a component is suspect and the vehicle remains under manufacturer warranty, refer to the Warranty Policy and Procedures manual (section B1.2), or determine if any prior approval programme is in operation, prior to the installation of a new module/component.

• NOTE: Generic scan tools may not read the codes listed, or may read only five digit codes. Match the five digits from the scan tool to the first five digits of the seven digit code listed to identify the fault (the last two digits give extra information read by the manufacturer-approved diagnostic system).

• NOTE: When performing voltage or resistance tests, always use a digital multimeter (DMM) accurate to three decimal places and with a current calibration certificate. When testing resistance, always take the resistance of the DMM leads into account.

• NOTE: Check and rectify basic faults before beginning diagnostic routines involving pinpoint tests.

• NOTE: If DTCs are recorded and, after performing the pinpoint tests, a fault is not present, an intermittent concern may be the cause. Always check for loose connections and corroded terminals.

• NOTE: Tire Pressure Monitor System DTCs will be logged in the Central Junction Box (CJB).

DTC	Description	Possible Cause	Action
B118251	Tire Pressure Monitoring System (TPMS) - Not Programmed	• TPMS module in Transport/Factory mode	Enter TPMS module into customer mode using manufacturer approved diagnostic system
C1A5616	Front Left Wheel Module - circuit voltage below threshold (low battery)	• Siemens internal algorithm	Install a new module as required
C1A5686	Front Left Wheel Module - signal invalid (out of range)	• Siemens internal algorithm	Install a new module as required
C1A5693	Front Left Wheel Module - no operation (lost sensor)	• Siemens internal algorithm	Install a new module as required
C1A5711	Left Front Initiator - short to ground	• Left front initiator circuit - short to ground	Refer to electrical circuit diagrams and check left front initiator circuit for short to ground
C1A5712	Left Front Initiator - short to power	• Left front initiator circuit - short to power	Refer to electrical circuit diagrams and check left front initiator circuit for short to power
C1A5713	Left Front Initiator - open circuit	• Left front initiator circuit - open circuit	Refer to electrical circuit diagrams and check left front initiator circuit for open circuit
C1A5816	Front Right Wheel Module - circuit voltage below threshold (low battery)	• Siemens internal algorithm	Install a new module as required
C1A5886	Front Right Wheel Module - signal invalid (out of range)	• Siemens internal algorithm	Install a new module as required

DTC	Description	Possible Cause	Action
C1A5893	Front Right Wheel Module - no operation (lost sensor)	• Siemens internal algorithm	Install a new module as required
C1A5911	Right Front Initiator - short to ground	• Right front initiator circuit - short to ground	Refer to electrical circuit diagrams and check right front initiator circuit for short to ground
C1A5912	Right Front Initiator - short to power	• Right front initiator circuit - short to power	Refer to electrical circuit diagrams and check right front initiator circuit for short to power
C1A5913	Right Front Initiator - open circuit	• Right front initiator circuit - open circuit	Refer to electrical circuit diagrams and check right front initiator circuit for open circuit
C1A6016	Rear Left Wheel Module - circuit voltage below threshold (low battery)	• Siemens internal algorithm	Install a new module as required
C1A6086	Rear Left Wheel Module - signal invalid (out of range)	• Siemens internal algorithm	Install a new module as required
C1A6093	Rear Left Wheel Module - no operation (lost sensor)	• Siemens internal algorithm	Install a new module as required
C1A6111	Left Rear Initiator - short to ground	• Left rear initiator circuit - short to ground	Refer to electrical circuit diagrams and check left rear initiator circuit for short to ground
C1A6112	Left Rear Initiator - short to power	• Left rear initiator circuit - short to power	Refer to electrical circuit diagrams and check left rear initiator circuit for short to power
C1A6113	Left Rear Initiator - open circuit	• Left rear initiator circuit - open circuit	Refer to electrical circuit diagrams and check left rear initiator circuit for open circuit
C1A6216	Rear Right Wheel Module - circuit voltage below threshold (low battery)	• Siemens internal algorithm	Install a new module as required
C1A6286	Rear Right Wheel Module - signal invalid (out of range)	• Siemens internal algorithm	Install a new module as required
C1A6293	Rear Right Wheel Module - no operation (lost sensor)	• Siemens internal algorithm	Install a new module as required
C1A6311	Right Rear Initiator - short to ground	• Right rear initiator circuit - short to ground	Refer to electrical circuit diagrams and check right rear initiator circuit for short to ground
C1A6312	Right Rear Initiator - short to battery	• Right rear initiator circuit - short to power	Refer to electrical circuit diagrams and check right rear initiator circuit for short to power
C1A6313	Right Rear Initiator - open circuit	• Right rear initiator circuit - open circuit	Refer to electrical circuit diagrams and check right rear initiator circuit for open circuit
C1B1412	Sensor supply #1 - circuit short to power	• Sensor supply #1 circuit - short to power	Refer to electrical circuit diagrams and check sensor supply #1 circuit for short to power
C1D1800	Localisation failed	• Tire pressure monitor localisation failed	Check for additional related DTCs and refer to this DTC Index
C1D2105	Wheel module - general signal failure	• Siemens internal algorithm	Carry out the pinpoint tests associated to this DTC using the manufacturer approved diagnostic system
U015500	Lost Communication With Instrument Panel Cluster (IPC) Control Module	• Lost communication with instrument cluster	Carry out the associated network test for this DTC using the manufacturer approved diagnostic system
U016400	Lost Communication With HVAC Control Module	• Lost communication with climate control module	Carry out the associated network test for this DTC using the manufacturer approved diagnostic system

mcxbb.com

Published: 11-May-2011

Wheels and Tires - Wheel and Tire

Removal and Installation

Removal

1. **1.** WARNING: Do not work on or under a vehicle supported only by a jack. Always support the vehicle on safety stands.

   Raise and support the vehicle.

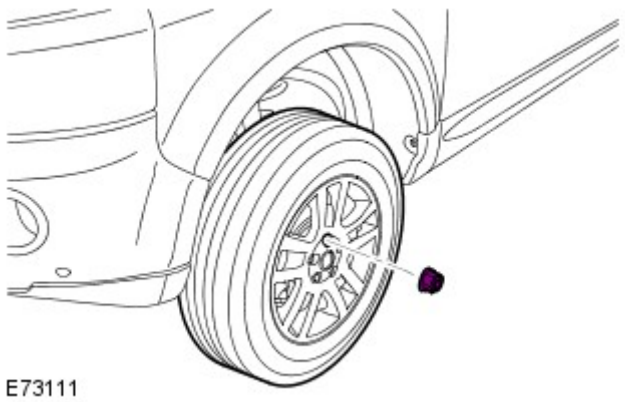

2.
   - Torque: 133 Nm (98 lb.ft).

Installation

1. **1.** CAUTION: Apply a small amount of grease to the hub and wheel mating surfaces before installation. Make sure the grease does not come into contact with the vehicles braking components and the wheel stud threads. Failure to follow these instructions may result in personal injury.

   To install, reverse the removal procedure.

mcx3.com

Published: 11-May-2011

Wheels and Tires - Tire Low Pressure Sensor

Removal and Installation

Removal

WARNING: The valve seal and steel washer must be replaced each time a tire is changed to avoid seal failure. The seal and washer must be replaced if the sensor is removed. Removal of the sensor retaining nut must be regarded as sensor removal. The valve cap must always be in place except when inflating, releasing or checking pressure.

• NOTE: If the sensor is replaced on a 'running' wheel, the new sensor identification will be learnt when the vehicle is first driven. If a new sensor is installed to the spare wheel, the identification for that sensor must be programmed into the tire pressure monitoring system (TPMS) module using Land Rover approved diagnostic equipment. The identification code is provided on a label with the complete assembly and is also printed on the casing of each sensor.

1. **1.** WARNING: Make sure to support the vehicle with axle stands.

   Raise and support the vehicle.

2. Remove the wheel and tire.

   Refer to: Wheel and Tire (204-04 Wheels and Tires, Removal and Installation).

3. **3.** CAUTION: To avoid damage to the tire low pressure sensor, release the tire bead from the rim, 180 degrees from the valve.

   Remove the tire from the wheel.

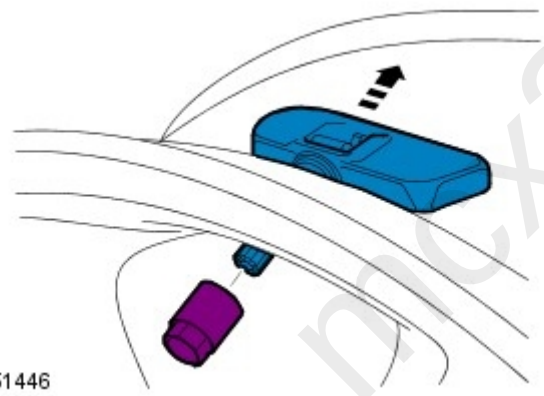

4.
   - Remove and discard the nut.
   - Release and withdraw the sensor along the valve axis.

5. Remove and discard the seal and washer.

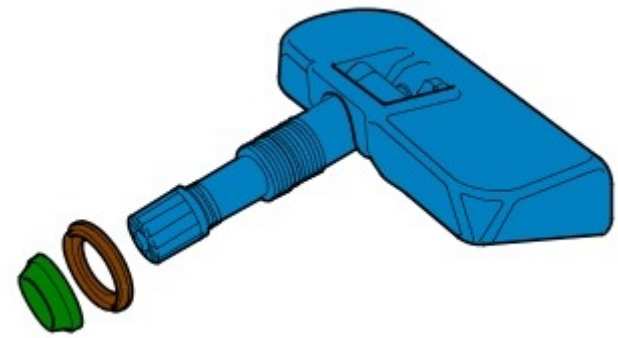

Installation

1. **1.** CAUTIONS:

mcx30.com

Make sure that the component is clean, free of foreign material and lubricant.

Do not use compressed air to clean the sensor.

Install a new washer and seal, making sure the valve remains pressed fully onto its seat.

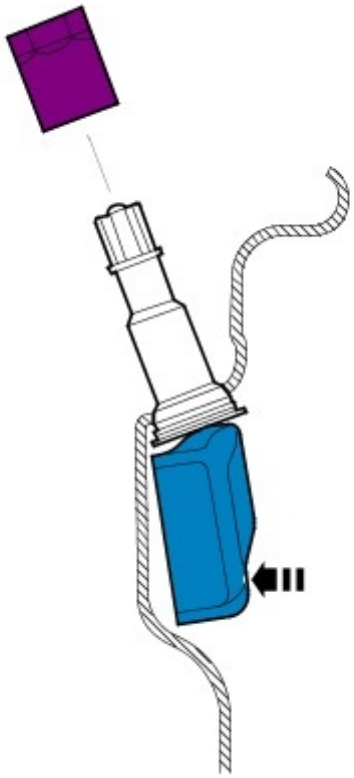

E51449

2. **2.** CAUTION: Make sure that the component is clean, free of foreign material and lubricant.
   - Install the tire low pressure sensor.
   - Install and hand tighten the nut whilst keeping the sensor in place.
   - Tighten the nut.

     Torque: 8 Nm

3. Install the tire and balance the wheel.

4. Install the wheel and tire.

   Refer to: Wheel and Tire (204-04 Wheels and Tires, Removal and Installation).

mcx30.com

Published: 11-May-2011

Wheels and Tires - Tire Pressure Monitoring System (TPMS) Receiver

Removal and Installation

Removal

1. Remove both D-pillar upper trim panels.

   Refer to: D-Pillar Trim Panel (501-05 Interior Trim and Ornamentation, Removal and Installation).

2. Remove both C-pillar trim panels.

   Refer to: C-Pillar Trim Panel (501-05 Interior Trim and Ornamentation, Removal and Installation).

3. Remove both rear passenger assist handles.

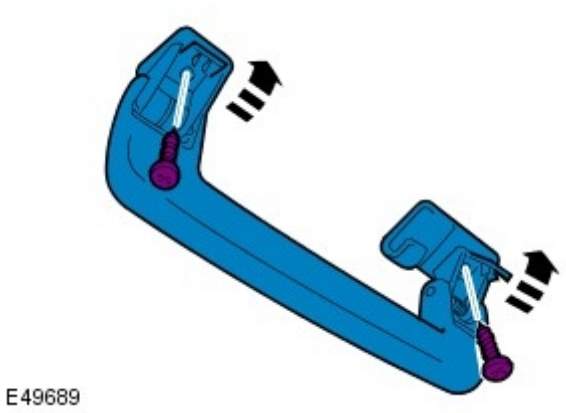

4. Release the rear of the headliner.

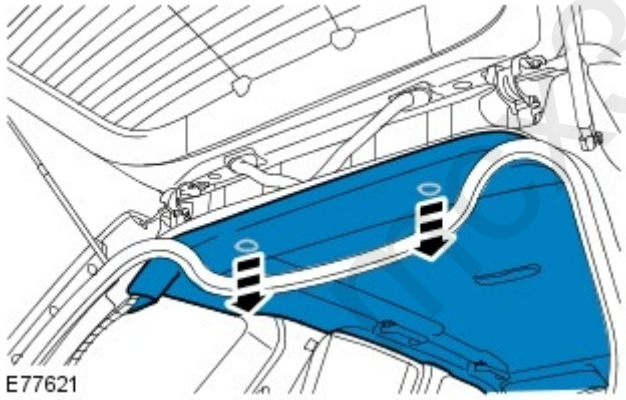

5. Remove the tire pressure monitoring system receiver.

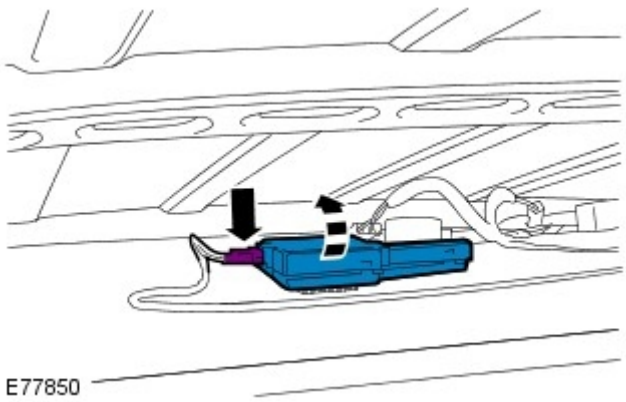

Installation

1. To install, reverse the removal procedure.

2. If a new component is to be installed, configure using IDS.

mcx30.com

Published: 11-May-2011

Wheels and Tires - Tire Pressure Monitoring System (TPMS) Front Antenna

Removal and Installation

Removal

1. **1.** WARNING: Do not work on or under a vehicle supported only by a jack. Always support the vehicle on safety stands.

   Raise and support the vehicle.

2. Remove the front wheel.

   Refer to: Wheel and Tire (204-04 Wheels and Tires, Removal and Installation).

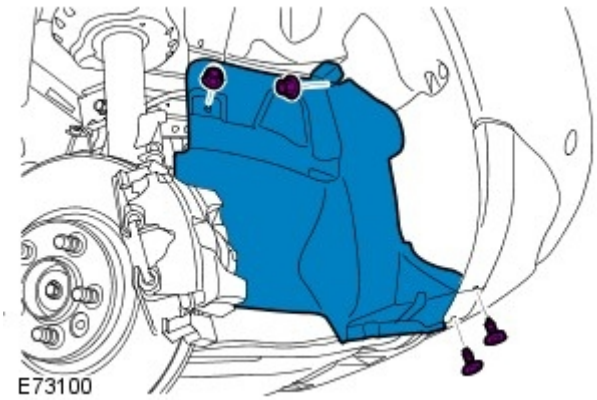

3. Remove the fender splash shield extension panel.

4. Release the front of the fender splash shield.

5. Remove the tire pressure antenna.

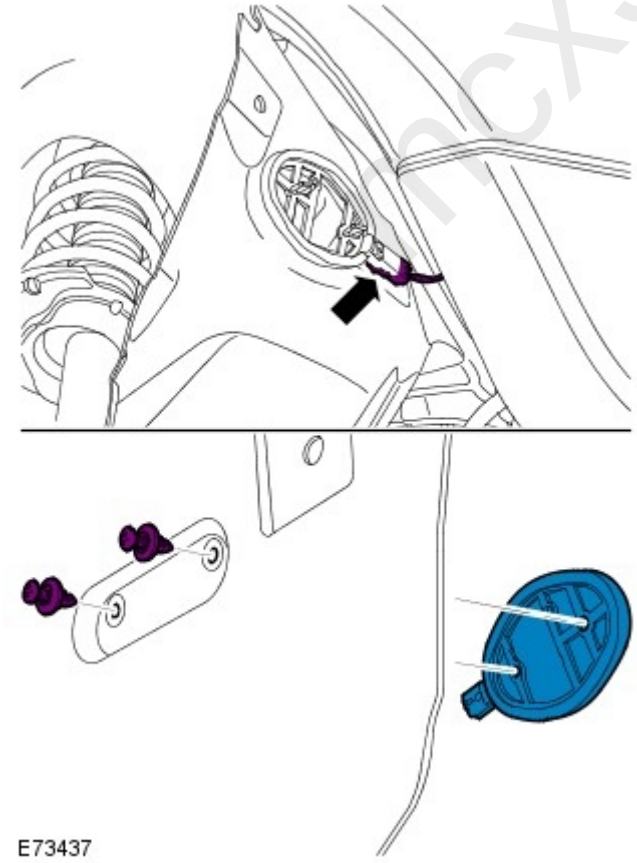

mcx30.com

Installation

1. To install, reverse the removal procedure.
2. Initiate a new tire pressure antenna using WDS.

mcx30.com

Published: 11-May-2011

Wheels and Tires - Tire Pressure Monitoring System (TPMS) Rear Antenna

Removal and Installation

Removal

1. **1.** WARNING: Do not work on or under a vehicle supported only by a jack. Always support the vehicle on safety stands.

   Raise and support the vehicle.

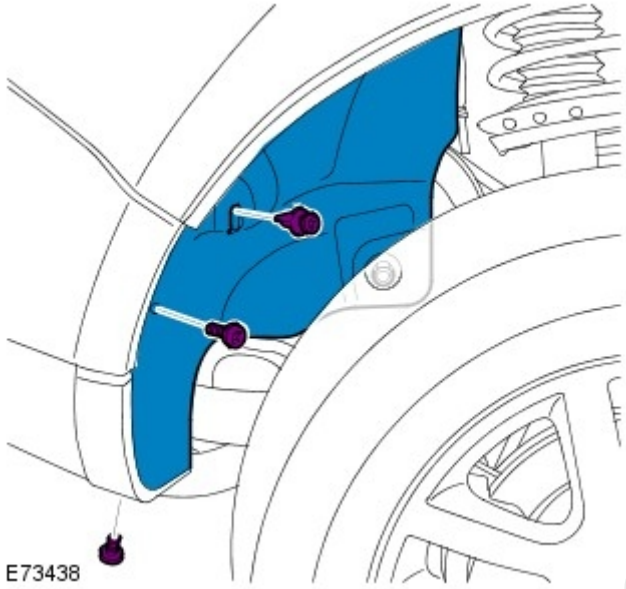

2. Release the fender splash shield.

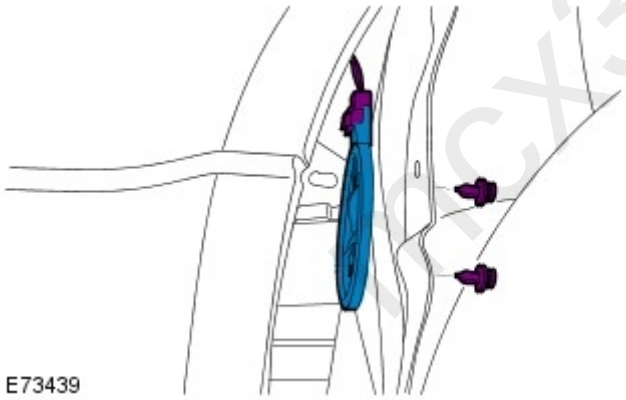

3. Remove the tire pressure antenna.

Installation

1. To install, reverse the removal procedure.

2. Initiate a new tire pressure antenna using WDS.

mcx30.com